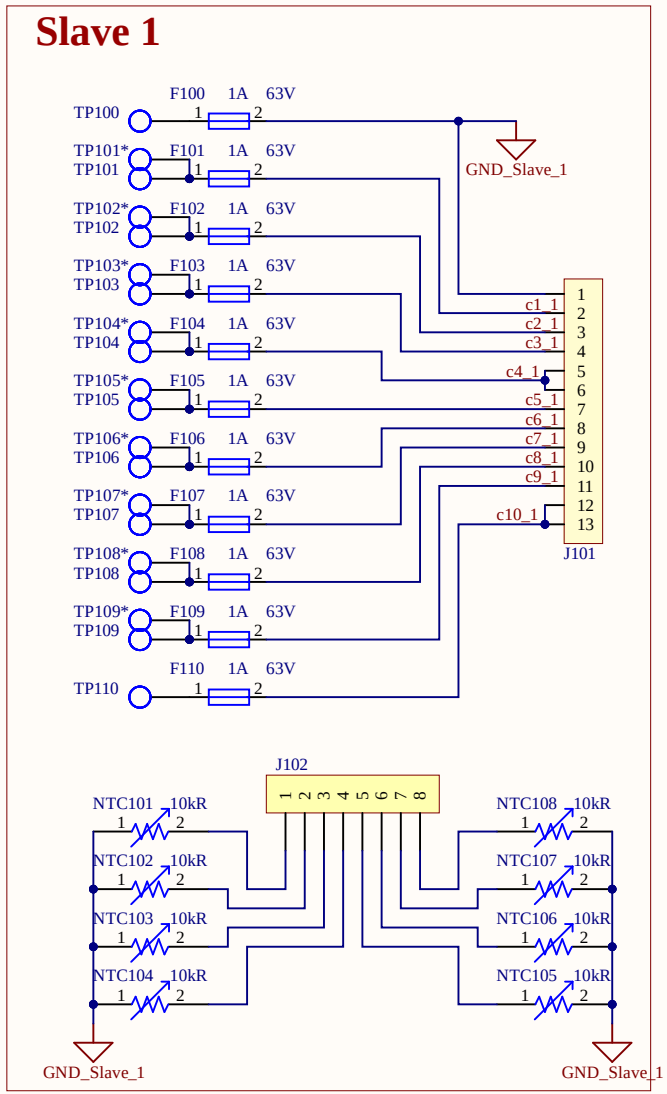


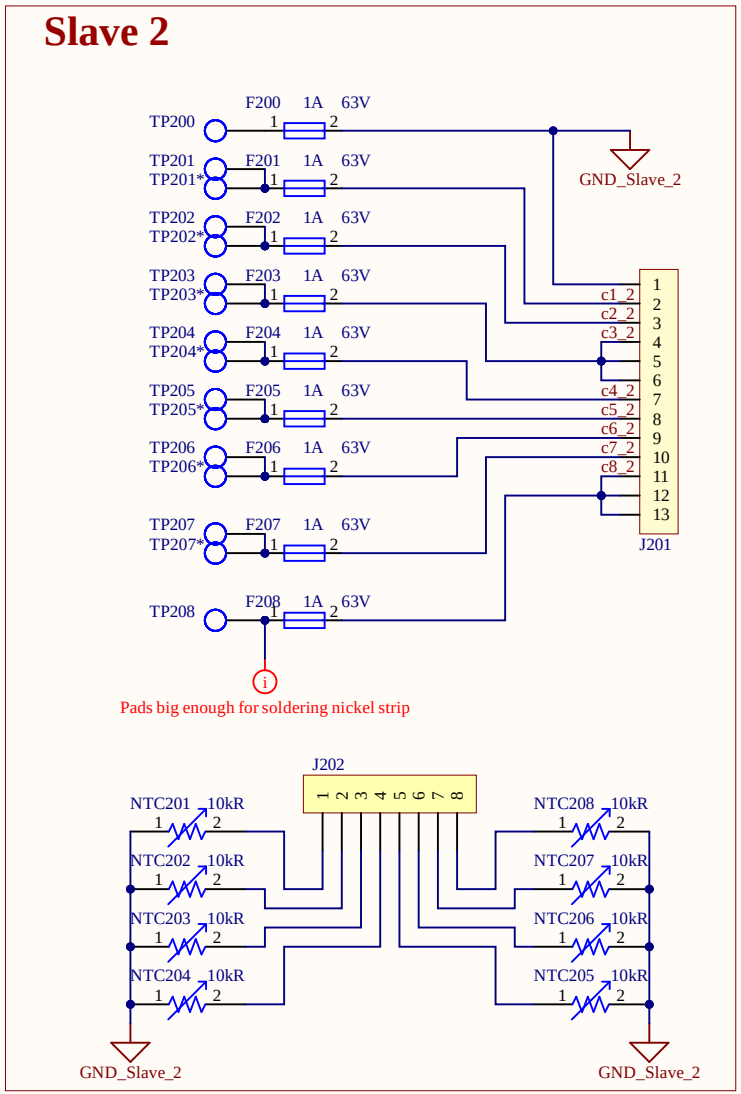


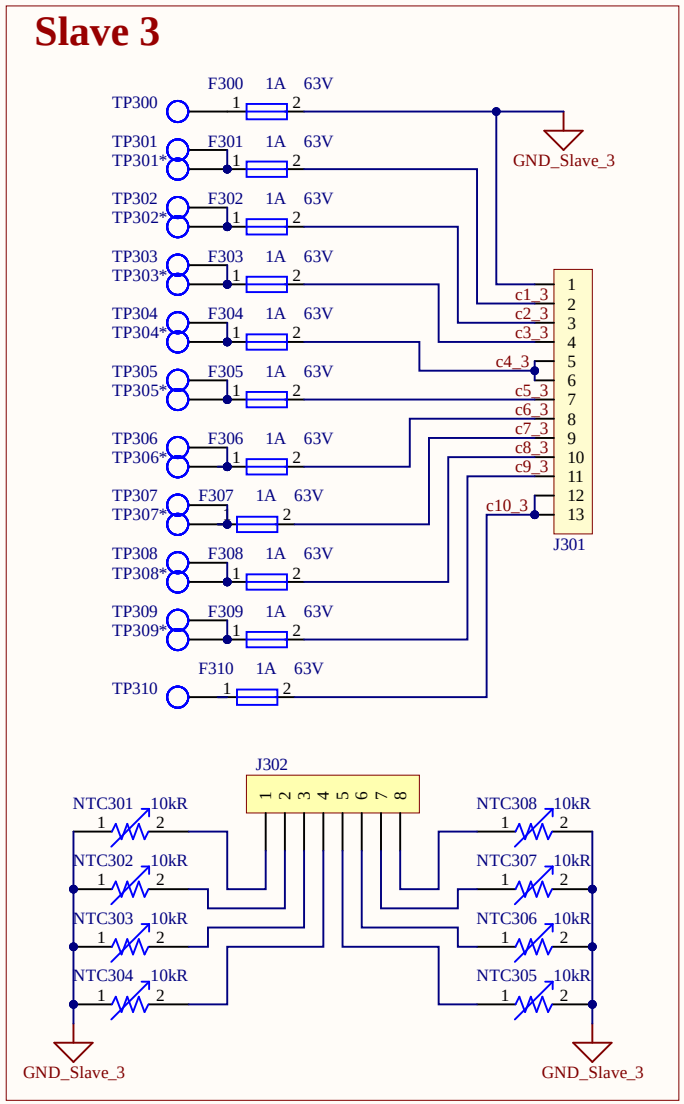


| | | | |
|---|---|---|---|
| Company: e-Tech Racing | e-techracing.es | | |
| Project: Accumulator_HotDog | Variant: [No Variations] | | |
| Size: - | Page Contents: Accumulator_HotDog_v2.SchDoc | Version: 2.0 | |
| | | Department: Accumulator-BMS | |
| Author: Inass Himmiche | inass.himmiche@estudiantat.upc.edu | Sheet 1 of 1 | |
| Checked by: B r C C r | | Date: 18/01/2024 | |

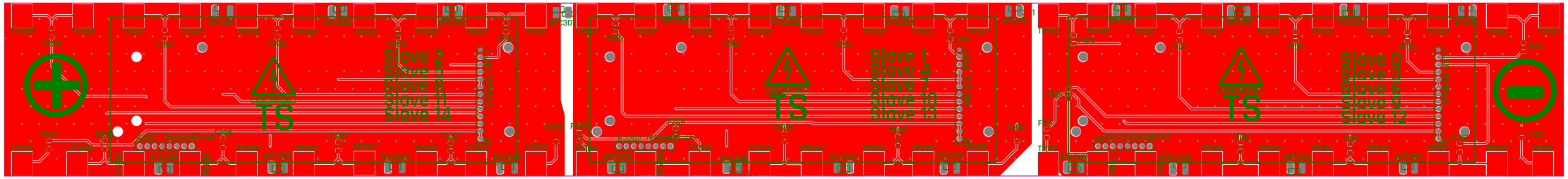
Slave 2
Slave 5
Slave 8
Slave 11
Slave 14
TS
Slave 1
Slave 4
Slave 7
Slave 10
Slave 13
TS
Slave 0
Slave 3
Slave 6
Slave 9
Slave 12
TS

Powertrain Never Rests


TECH RACING
FORMULA STUDENT TEAM
Inspr Hinmsche - 2024


Accumulator HotDog

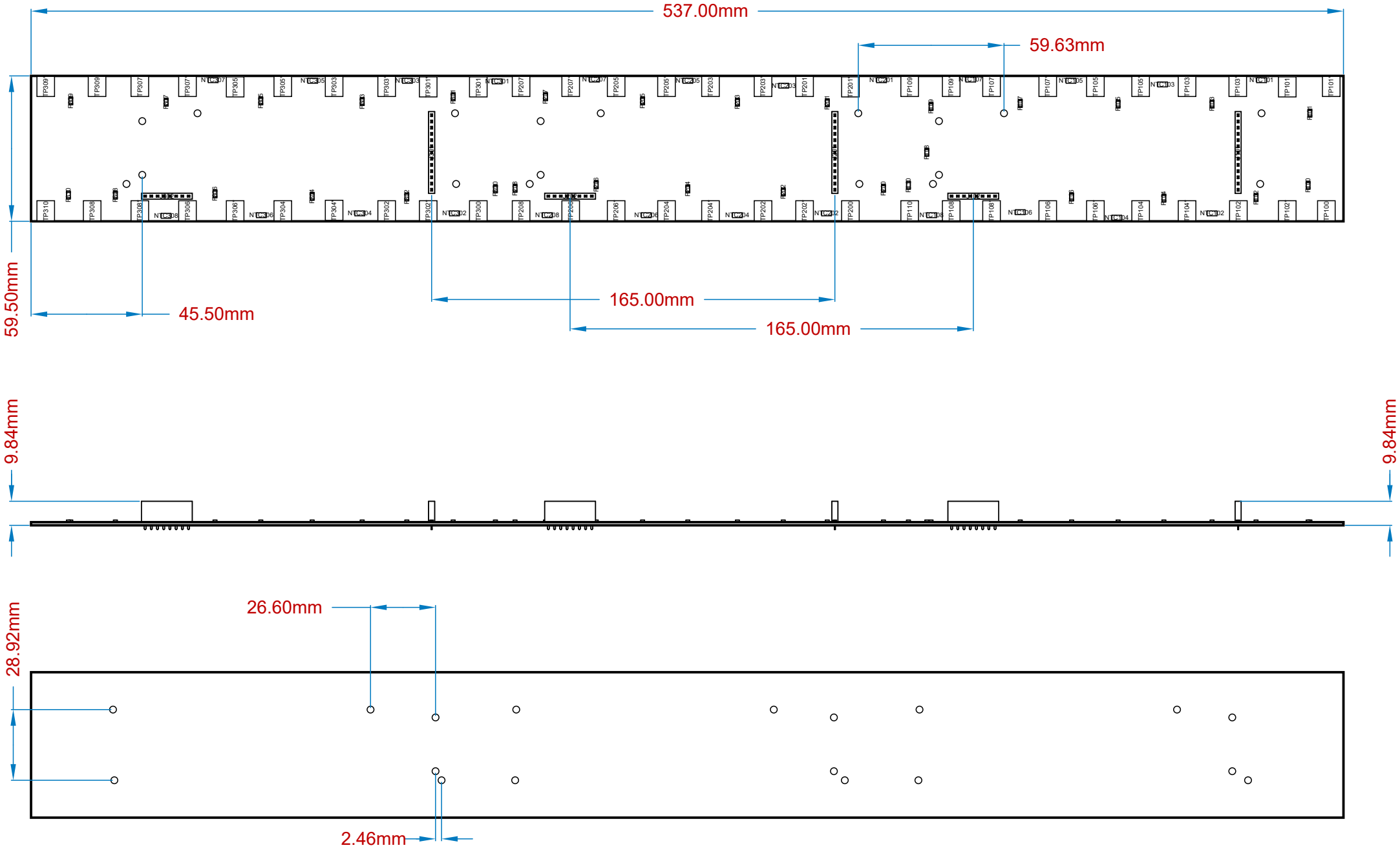
537.00mm
59.63mm
59.50mm
45.50mm
165.00mm
165.00mm
9.84mm
9.84mm
28.92mm
26.60mm
2.46mm

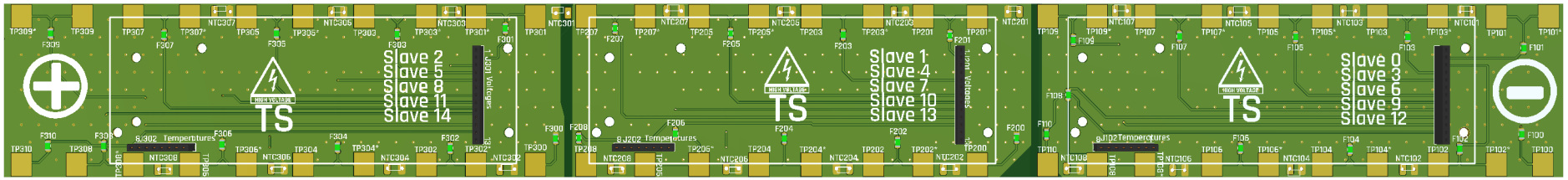
Slave 2
Slave 5
Slave 8
Slave 11
Slave 14
TS
Slave 1
Slave 4
Slave 7
Slave 10
Slave 13
TS
Slave 0
Slave 3
Slave 6
Slave 9
Slave 12
TS

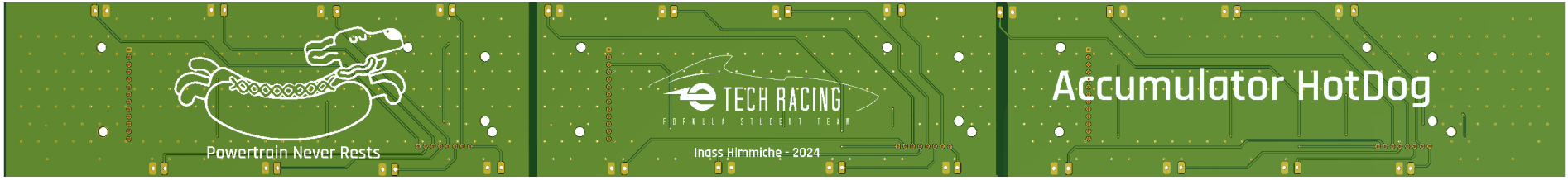
Powertrain Never Rests
TECH RACING
FORMULA STUDENT TEAM
Inass Himmiche - 2024
Accumulator HotDog

| Line # | Designator | Name | Quantity |
|---|---|---|---|
| | F100, F101, F102, F103, F104, F105, F106, F107, F108, F109, F110, F200, F201, F202, F203, F204, F205, F206, F207, F208, F300, F301, F302, F303, F304, F305, F306, F307, F308, F309, F310 | 0437001.WRA | 31 |
| | J101, J201, J301 | WR-PHD 13 socket header | 3 |
| | J102, J202, J302 | J_WR-PHD 8pin Socket Header | 3 |
| | NTC101, NTC102, NTC103, NTC104, NTC105, NTC106, NTC107, NTC108, NTC201, NTC202, NTC203, NTC204, NTC205, NTC206, NTC207, NTC208, NTC301, NTC302, NTC303, NTC304, NTC305, NTC306, NTC307, NTC308 | NXRT15XV103FA1B040 | 24 |

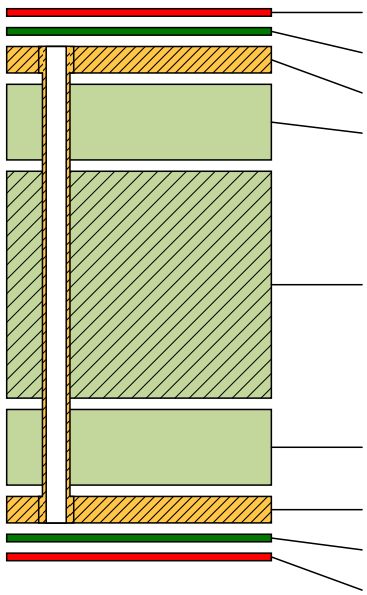

| Material | Layer | Thickness | Dielectric Material | Type | Gerber |
|---|---|---|---|---|---|
| | Top Overlay | | | Legend | GTO |
| Surface Material | Top Solder | 0.01mm | Solder Resist | Solder Mask | GTS |
| **Copper** | **Top Layer** | **0.04mm** | | **Signal** | **GTL** |
| *Prepreg* | | *0.10mm* | *PP-006* | *Dielectric* | |
| | | *1.00mm* | *FR-4* | *Dielectric* | |
| *Prepreg* | | *0.10mm* | *PP-006* | *Dielectric* | |
| **Copper** | **Bottom Layer** | **0.04mm** | | **Signal** | **GBL** |
| Surface Material | Bottom Solder | 0.01mm | Solder Resist | Solder Mask | GBS |
| | Bottom Overlay | | | Legend | GBO |

Total thickness: 1.29mm

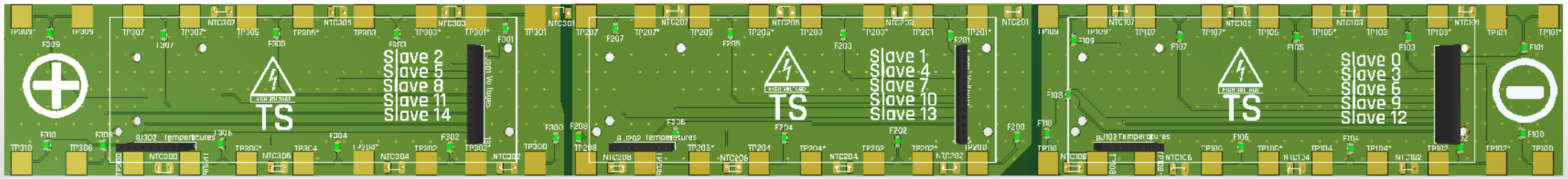
Slave 2
Slave 5
Slave 8
Slave 11
Slave 14
TS
Slave 1
Slave 4
Slave 7
Slave 10
Slave 13
TS
Slave 0
Slave 3
Slave 6
Slave 9
Slave 12
TS